theRonda S360-110 DALI SP GST

Item no.: 2080516

DALI
Presence detectors

Description

- Passive infra-red presence detector for flush-mounted ceiling installation, DALI-2 certified
- Circular detection area 360°, Ø 8 m, (50 m²) at mounting height 3 m
- 1 chanel light DALI-2 in broadcast mode
- DALI-2 technology according to IEC 62386 Parts 101 and 103
- 1 push-button input
- Using of conventional push-buttons for maximum design freedom
- Switch or constant light control mode with stand-by function
- Dimmable lighting in switch mode with stand-by function
- Choice of fully or semi-automatic operation
- Adjustable brightness switching value
- Teach-in function via remote control or push-button
- Setting of room correction factor (Automatic adjustment of brightness measurement)
- Light time delay can be set
- Calibrated 1 channel light measuremen
- Brief-presence
- Self-learning time delay
- Extremely easy setting of energy saving characteristics with the new „eco plus" function
- Selectable control speed
- Manual override via remote control or pushbutton
- Behavior after push button operation selectable (school / office)
- Test mode light
- Test-Mode presence
- Remote-controllable
- Scenes
- Sensitivity adjustable
- Detection area can be limited using cover clip
- Extension of detection area via Master/Slave or Master/Master switching
- Optimized handling by installer during assembly, wiring, commissioning

Technical data

	theRonda S360-110 DALI SP GST
Operating voltage	110 V AC - 230 V AC
Frequency	50 - 60 Hz
Minimum height	1.7 m
Installation type	Ceiling mounting, Indoor, Flush-mounted
Colour	White
Switching output	DALI

	theRonda S360-110 DALI SP GST
Power consumption	<
Light measurement	Mixed light measurement
Setting range brightness	10 - 3000 lx
Lamp types	Incandescent/halogen lamps, fluorescent lamps, Energy saving lamps, LEDs
Control output	100 mA

theRonda S360-110 DALI SP GST

Item no.: 2080516

Technical data

	theRonda S360-110 DALI SP GST
Ouput light	DALI-interface according to IEC SN EN 62 386 for max. 50 DALI devices
Detection range	50 m² (ø 8 m | 360°)
Detection angle	360°

	theRonda S360-110 DALI SP GST
Ambient temperature	50°C
Type of protection	IP 54 (when fitted)

Connection example

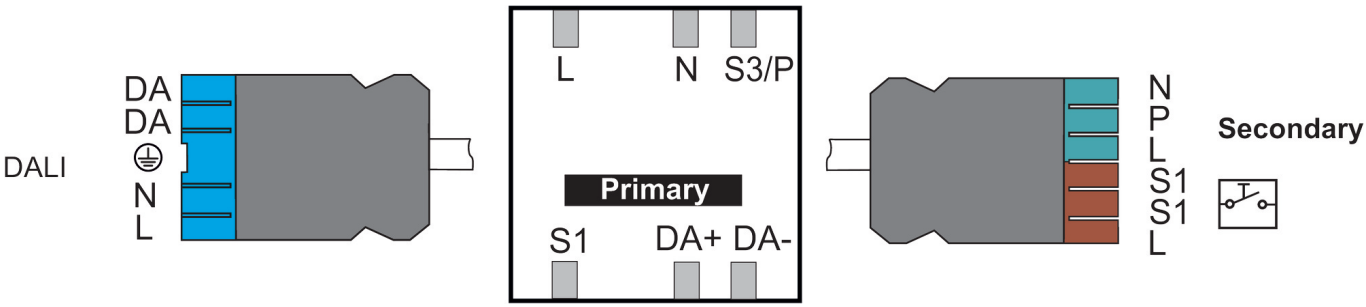

Detection range for planning applications at a temperature of 21 °C

Mounting height (A)	Sitting (S)	Diagonally (T)	Head on to (R)
2 m	5 m² | 2.5 m	38 m² | 7 m	5 m² | 2.5 m
2.5 m	7 m² | 3 m	38 m² | 7 m	7 m² | 3 m
3 m	13 m² | 4 m	50 m² | 8 m	13 m² | 4 m
3.5 m		50 m² | 8 m	13 m² | 4 m
4 m		64 m² | 9 m	13 m² | 4 m

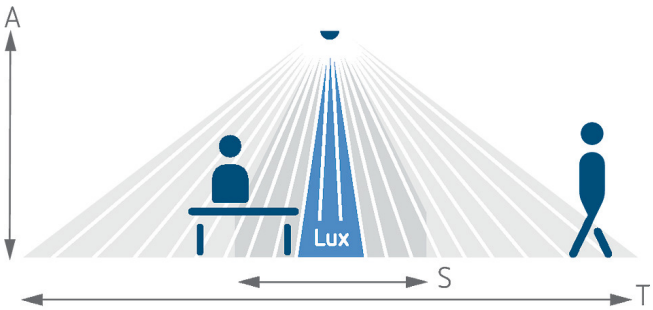

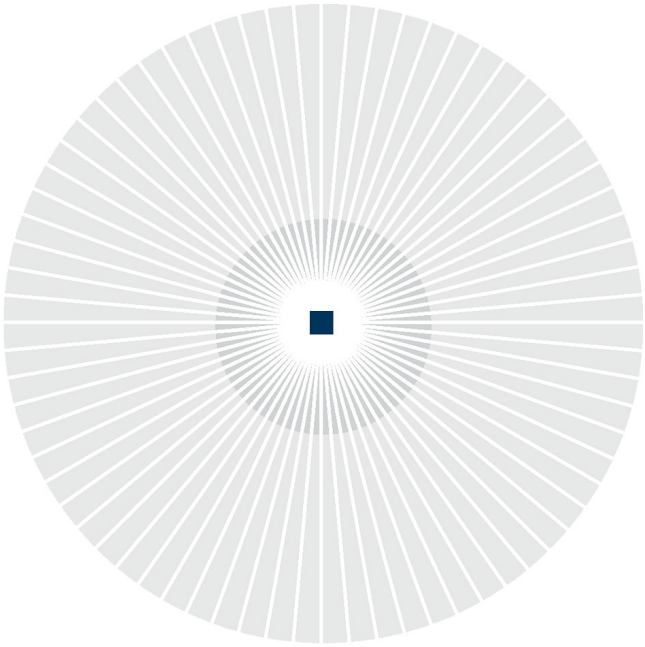

theRonda S360-110 DALI SP GST

Item no.: 2080516

Detection range according to Sensnorm IEC 63180

Mounting height (A)	Diagonally (T)	Head on to (R)	Sitting (S)
2.5 m	50 m² | 8 m	28 m² | 6 m	20 m² | 5 m
4 m	79 m² | 10 m	71 m² | 9.5 m	

Scale drawings

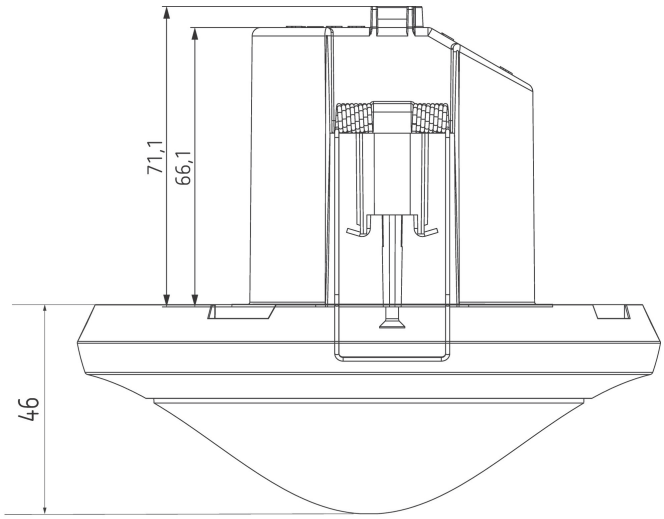

Cut-out Ø 68 mm

Accessories

theSenda P
Item no.: 9070910

theSenda S
Item no.: 9070911

Masking clip
Item no.: 9070921

QuickSafe
Item no.: 9070531

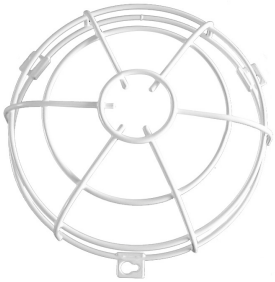

Accessories

theSenda B
Item no.: 9070985

Cover 110 GR
Item no.: 9070591

Cover 110 BK
Item no.: 9070851