UR20-4AI-UI-16

Weidmüller Interface GmbH & Co. KG
Klingenbergstraße 26
D-32758 Detmold
Germany

www.weidmueller.com

Product image

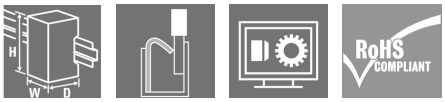

Inputs can be parameterised; up to 3-wire + FE; accuracy 0.1% FSR

Analogue input modules of the u-remote system are available in many variants with different resolutions and wiring solutions.
Variants are available with 12- and 16-bit resolution, which record up to 4 analogue sensors with +/-10 V, +/-5 V, 0...10 V, 0...5 V, 2...10 V, 1...5 V, 0...20 mA or 4...20 mA with maximum accuracy. Each plug-in connector can optionally connect sensors with 2- or 3-wire technology. The parameters for the measurement range can be individually set for each channel. In addition, each channel has its own status LED.
A special variant for Weidmüller interface units enables current measurements with 16-bit resolution and maximum accuracy for 8 sensors at a time (0...20 mA or 4...20 mA).

The module electronics supply the connected sensors with power from the input current path (U_{IN}).

General ordering data

Version	Remote I/O module, IP20, 4-channel, Analog signals, Input, Current/Voltage, 16 Bit
Order No.	1315620000
Type	UR20-4AI-UI-16
GTIN (EAN)	4050118118551
Qty.	1 pc(s).
Replacement parts	1350930000 1347200000 1484020000

UR20-4AI-UI-16

Weidmüller Interface GmbH & Co. KG
Klingenbergstraße 26
D-32758 Detmold
Germany

www.weidmueller.com

Technical data

Dimensions and weights

Depth	76 mm	Depth (inches)	2.992 inch
Height	120 mm	Height (inches)	4.724 inch
Width	11.5 mm	Width (inches)	0.453 inch
Mounting dimension - height	128 mm	Net weight	89 g

Temperatures

Storage temperature	-40 °C ... +85 °C	Operating temperature	-20 °C ... +60 °C
Operating temperature, min.	-20 °C	Operating temperature, max.	60 °C

analogue inputs

Accuracy	0.1% FSR	
Conversion time	1 ms	
Individual channel diagnosis	No	
Internal resistance I	41.2 Ω	
Internal resistance U	100 kΩ	
Module diagnosis	Yes	
Number of analogue inputs	4	
Resolution	16 Bit	
Response time	< 50 ms	
Reverse polarity protection	Yes	
Sensor connection	2-wire, 3-wire, 3-wire + FE	
Sensor supply	Yes	
Sensor supply	min.	0 mA
	nominal	750 mA
	max.	750 mA
Short-circuit-proof	Yes	
Type	1. U (0...5 V, 0...10 V, 1...5 V, 2...10 V, ±10 V), 2. I (0–20 mA or 4–20 mA), Adjustable input for current or voltage	

Connection data

Type of connection	PUSH IN	Wire connection cross section, finely stranded, max.	1.5 mm²
Wire connection cross section, finely stranded, min.	0.14 mm²	Wire cross-section, finely stranded, max. (AWG)	AWG 16
Wire cross-section, finely stranded, min. (AWG)	AWG 26	Wire cross-section, solid, max.	1.5 mm²
Wire cross-section, solid, max. (AWG)	AWG 16	Wire cross-section, solid, min.	0.14 mm²
Wire cross-section, solid, min. (AWG)	AWG 26		

UR20-4AI-UI-16

Weidmüller Interface GmbH & Co. KG
Klingenbergstraße 26
D-32758 Detmold
Germany

www.weidmueller.com

Technical data

General data

Air humidity (operation)	10% to 95%, non-condensing as per DIN EN 61131-2	Air humidity (storage)	10% to 95%, non-condensing as per DIN EN 61131-2
Air humidity (transport)	10% to 95%, non-condensing as per DIN EN 61131-2	Air pressure (operation)	≥ 795 hPa (height ≤ 2000 m) as per DIN EN 61131-2
Air pressure (storage)	1013 hPa (height 0 m) to 700 hPa (height 3000 m) as per DIN EN 61131-2	Air pressure (transport)	1013 hPa (height 0 m) to 700 hPa (height 3000 m) as per DIN EN 61131-2
Pollution severity	2	Rail	TS 35
Shock	15 g over 11 ms, half sinus wave, acc. to IEC 60068-2-27	Surge voltage category	II
Test voltage	500 V	UL 94 flammability rating	V-0
Vibration resistance	5 Hz ≤ f ≤ 8.4 Hz: 3.5-mm amplitude as per IEC 60068-2-6, 8.4 Hz ≤ f ≤ 150 Hz: 1 g acceleration as per IEC 60068-2-6		

Power supply

Current consumption from I_{IN} (the respective power segment)	25 mA + sensor feed	Current consumption from I_{sys}, typ.	8 mA
Reverse polarity protection	Yes	Voltage supply	24 V DC +20 %/ -15 %, via the system bus

System data

Diagnostic data	1 Bit	Field bus protocol	PROFINET IRT, PROFINET RT, PROFIBUS DP-V1, EtherCAT, Modbus/TCP, EtherNet/IP, CANopen, DeviceNet, POWERLINK, CC-Link, CC-Link IE TSN, IEC 61162-450
Galvanic isolation	500 V DC between the current paths	Interface	u-remote system bus
Module type	Analogue input module	Parameter data	14 Byte
Process data	8 Byte	Transmission speed of system bus, max.	48 Mbit

Classifications

ETIM 6.0	EC001596	ETIM 7.0	EC001596
ETIM 8.0	EC001596	ETIM 9.0	EC001596
ECLASS 9.0	27-24-26-01	ECLASS 9.1	27-24-26-01
ECLASS 10.0	27-24-26-01	ECLASS 11.0	27-24-26-01
ECLASS 12.0	27-24-26-01	ECLASS 13.0	27242601

UR20-4AI-UI-16

Weidmüller Interface GmbH & Co. KG
Klingenbergstraße 26
D-32758 Detmold
Germany

www.weidmueller.com

Technical data

Tender specification sheets

Long specification	Analogue input module 4AI-UI-16 4-channel analogue input module, positively switching Connection system: PUSH-IN Potentials on plugs: analogue input, 24 VDC and 0 V of the input path, FE Dimensions (HxWxD): 120 mm (with lever: 128 mm), 11.5 mm, 76 mm Module status: display via collective message, LED at the top of the module Channel status: indication directly at the contact point Weight: 88.6 g Module diagnosis: yes Individual channel diagnosis: no Reverse-polarity protection: yes Operating temperature: -20°C - +60°C Process data: 4 bits Diagnostic data: 1 bits Galvanic isolation: between field and system bus Supply voltage: 24 VDC +25% / –15% Internal current consumption: 8 mA Supply current consumption: 25 mA + sensor feed Accuracy: 0.1% FSR Resolution: 16 bits Conversion time: 1 ms Input parameters: voltage or current Internal resistance U: 100 kΩ Internal resistance I: 41.2 Ω Brand: Weidmüller Type: UR20-4AI-UI-16

Environmental Product Compliance

REACH SVHC	Lead 7439-92-1
SCIP	82327f13-cd27-455a-ab5b-a62e1996dcf8

UR20-4AI-UI-16

Weidmüller Interface GmbH & Co. KG
Klingenbergstraße 26
D-32758 Detmold
Germany

www.weidmueller.com

Technical data

Approvals

Approvals	
ROHS	Conform
UL File Number Search	UL Website
Certificate no. (cULus)	E141197
Certificate no. (cULusEX)	E223527

Downloads

Approval/Certificate/Document of Conformity	KC certificate Compass safe distance certificate Lloyds Register certificate DNV/GL certificate ABS certificate RINA certificate Bureau Veritas - Type Approval Certificate PRS (Polish Register of Shipping) NIPPON KAIJI KYOKAI Certificate DEMKO15ATEX1525X CCC certificate UKCA Declaration of Conformity - EN CE Declaration of Conformity - DE
Engineering Data	CAD data – STEP Compatibility information – Combinability of UR20
Engineering Data	Zuken E3.S
Product Change Notification	Release-Notes - Firmware
Software	Firmware – Current firmware UR20-4AI-UI Firmware – Archive firmware UR20-4AI-UI
User Documentation	MAN_U-REMOTE_DE MAN_U-REMOTE_EN
Catalogues	Catalogues in PDF-format

UR20-4AI-UI-16

Weidmüller Interface GmbH & Co. KG
Klingenbergstraße 26
D-32758 Detmold
Germany

www.weidmueller.com

Drawings

Block diagram

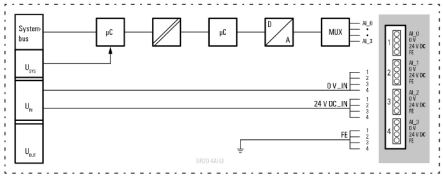

Connection diagram

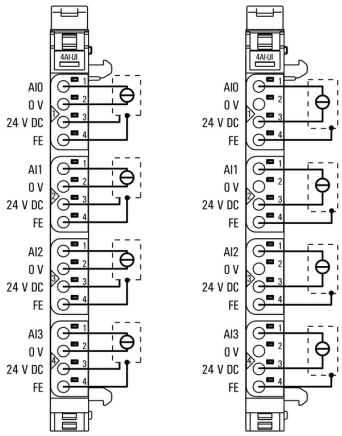

Explanation of abbreviations
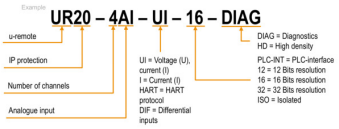
Analogue input modules