Ledinaire Wall-mounted WL060V

WL060V LED17S/830 PSU II WH

830 warm white - Power supply unit - Safety class II - White

The Ledinaire range contains a selection of popular off-the-shelf LED luminaires, each of which come with the high Philips quality levels and competitive price. Reliable, energy-efficient and affordable – just what you need.

Product data

General Information	
Beam angle of light source	120 °
Light source color	830 warm white
Light source replaceable	No
Number of gear units	1 unit
Driver/power unit/transformer	Power supply unit
Driver included	Yes
Optic type	Beam angle 120°
Luminaire light beam spread	120°
Control interface	-
Connection	Push-in connector 3-pole
Cable	-
Protection class IEC	Safety class II
Glow-wire test	Temperature 650 °C, duration 30 s
Flammability mark	For mounting on normally flammable surfaces
CE mark	CE mark
ENEC mark	-
Warranty period	3 years
Constant light output	Yes
Number of products on MCB of 16 A type B	32
RoHS mark	RoHS mark

Operating and Electrical	
Input Voltage	220/240 V
Input Frequency	50 or 60 Hz
Initial CLO power consumption	22 W
Average CLO power consumption	22 W
Inrush current	21.3 A
Inrush time	1.84 ms
Power Factor (Min)	0.9

Controls and Dimming	
Dimmable	No

Mechanical and Housing	
Housing Material	Acrylonitrile-butadiene-styrene
Reflector material	-
Optic material	Polymethyl methacrylate

Ledinaire Wall-mounted WL060V

Optical cover/lens material	Polymethyl methacrylate
Fixation material	-
Optical cover/lens finish	Opal
Overall length	345 mm
Overall width	345 mm
Overall height	95 mm
Overall diameter	345 mm
Length	3.5 m
Width	340 mm
Height	95 mm
Diameter	345 mm

Approval and Application

Ingress protection code	IP44 [Wire-protected, splash-proof]
Mech. impact protection code	IK03 [0.3 J]

Initial Performance (IEC Compliant)

Initial luminous flux (system flux)	1700 lm
Luminous flux tolerance	+/-10%
Initial LED luminaire efficacy	80 lm/W
Init. Corr. Color Temperature	3000 K
Init. Color Rendering Index	80
Initial chromaticity	(0.44, 0.41) SDCM<5
Initial input power	22 W
Power consumption tolerance	+/-10%

Over Time Performance (IEC Compliant)

Driver failure rate at 5000 h	0.4 %
Median useful life L70B50	30000 h
Median useful life L80B50	0 h
Median useful life L90B50	0 h

Application Conditions

Ambient temperature range	-20 to +40 °C
Maximum dim level	Not applicable
Suitable for random switching	No

Product Data

Full product code	871869938233999
Order product name	WL060V LED17S/830 PSU II WH
EAN/UPC - Product	8718699382339
Order code	912401483075
Numerator - Quantity Per Pack	1
Numerator - Packs per outer box	6
Material Nr. (12NC)	912401483075
Net Weight (Piece)	0.590 kg

Dimensional drawing

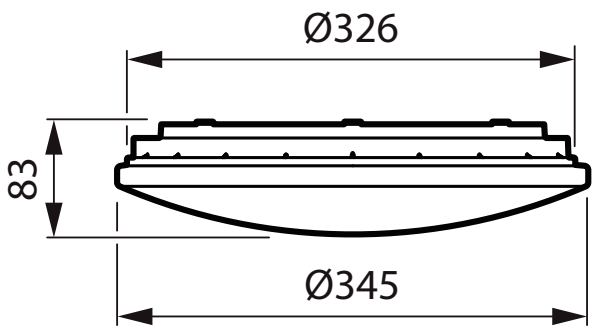

Ledinaire Wall-mounted WL060V

© 2018 Philips Lighting Holding B.V. All rights reserved. Philips Lighting reserves the right to make changes in specifications and/or to discontinue any product at any timewithout notice or obligation and will not be liable for any consequences resulting from the use of this publication.